SME 100 AWARDS
FAST MOVING COMPANIES®

SME 100 10 RANKING

PRODUCT CATALOGUE

TTL SALES & RENTAL SDN. BHD.
Reg No: 200501035285 (0717430-V)



NEW EDITION

GENERATOR

TTL is a leading equipment sales and rental company in Malaysia, specializing in high-quality industrial diesel and power generators. Our top-selling models include Airman, Atlas Copco, Denyo, McWel, and Nippon Sharyo generators.



Brand / Capacity	Airman	Atlas Copco	Denyo	McWel	Nippon Sharyo	TTL	Cummins
2kVA		✓					
5kVA				✓			
20kVA	✓		✓		✓		
37kVA	✓				✓		
40kVA	✓				✓		✓
50kVA	✓						
75kVA			✓		✓		
80kVA	✓		✓				✓
100kVA			✓		✓		
125kVA	✓		✓		✓		
150kVA							✓
180kVA							✓
195kVA	✓		✓		✓		
200kVA							✓
250kVA			✓		✓		✓
320kVA							✓
350kVA			✓		✓		
400kVA							✓
500kVA		✓					✓
550kVA			✓				
625kVA							✓
700kVA			✓				✓
1000kVA		✓	✓			✓	
1250kVA						✓	
1500kVA						✓	
1800kVA						✓	

MOBILE GENERATOR



Range	1000kVA, 1250kVA, 1500kVA, 1800kVA

www.ttl-holdings.com





AIRMAN

Free Air Delivery :

- 175cfm (100psi)
- 185cfm (100psi)
- 390cfm (102psi)
- 390cfm (150psi High Pressure)
- 655cfm (102psi)
- 750cfm (150psi)
- 830cfm (150psi)
- 750cfm (300psi High Pressure)





ATLAS COPCO

Free Air Delivery :

- 185cfm (102psi)
- Zone 2 185cfm (102psi)
- 190cfm (100 psi)





INGERSOLL RAND

Free Air Delivery :

375cfm (150psi High Pressure)
750cfm (150psi)
1070cfm (350psi High Pressure)











TTL supplies high-quality diesel-driven air compressors for ***industrial plant work***, ***shutdown maintenance***, and ***various other applications in Malaysia***. Our range includes single axle, single stage, oil-cooled, oil-injected screw compressors, rotary screw compressors, portable screw type compressors, and Zone 2 air compressors for offshore use.

Our best-selling models are ***Airman, Atlas Copco***, and ***Doosan/Ingersoll Rand*** air compressors.

AIR COMPRESSOR

LIGHTING TOWER

Our light towers are the perfect solution for ***construction***, ***emergencies***, ***events***, ***maintenance***, ***military defence***, or ***any other night work settings*** that require powerful lighting. Our best-selling models are the ***Atlas Copco*** and ***Toyoseiki*** light towers



Brand : Atlas Copco

Wattage :

1 LED lamp at 320W



Brand : Atlas Copco

Wattage :

4 Metal Halide Lamps at 1000W each



Brand : Atlas Copco

Wattage :

4 Metal Halide Lamps at 1000W each



Brand : Atlas Copco

Wattage :

4 LED lamps at 120W each



Brand : Atlas Copco

Wattage :

4 LED lamps at 350W each



Brand : TOYOSEIKI

Wattage :

4 Metal Halide Lamps at 400W each

WELDING MACHINE

TTL provides air-cooled industrial diesel engine welding machines that offer low maintenance. Our best-selling models include ***Miller*** and ***Lincoln*** welding machines, all engineered to meet the highest standards of quality and performance.



Brand : LINCOLN ELECTRIC

Output Range :

600 AMP



Brand : Miller

Output Range :

500 AMP



Brand : Miller

Output Range :

600 AMP

www.ttl-holdings.com

TTL GROUP OF COMPANIES



MOTO DIESEL LIGHTING TOWER

MT5GFLNLT





SPECIFICATIONS

Mobile Lighting Tower	**MLT 800**
Rated Output (Watt)	**5.5 kVA**
Max Output (Watt)	**6 kVA**
Frequency (Hz)	**50**
Diesel Tank Capacity	**8 Hours Capacity**
Voltage (V)	**230**
Lamp Type	**LED**
Lamp (Watts)	**200x4**
Lifting System	**Manual**
Max Lifting Height (M)	**4**
Engine Mode	**Moto MT186 (Diesel Aircolled)**
Starting System	**Manual / Electric**
Weight (KG)	**290**

LIGHT TOWER MLT10S

LIGHT TOWER 6 X 1000W | MODEL MLT10S

GENERATOR	Altenator Make / Modal	MW10
	Rated Current	27A
	Frequency	50Hz
	Voltage	230V
	Power Factor	1
	Phase	Single Phase
ENGINE	Engine Make / Model	Kubota D1105
	No of Cylinder	3 Cylinder in-line
	Type	Water-cooled Industrial Diesel Engine
	Displacement	1.123 L
	Rated Output	10.1KW @ 1500RPM
	Fuel Consumption	2.5L/Hour, 1.7L/Hour Eco Mode
LIGHT TOWER	Mast Type	Electric Motor Adjustable Winch
	Max Mast Height	8m
	IP Rating	IP67
	No of Light / Capacity	6 X 1000W Led (Non Electric Tiltable Angle)
	Illuminated Area	5700m^2
	Total Lumen	540000 Lux
Fuel Tank Capacity		125L Full Tank: 73h (Eco)/ 48h (Max. Light)
Overall Dimension (mm)		L-2570 x W-1250 x H - 2740
Accessories		Comes with Tow Bar & Outrigger X 4 Nos
Tyre Size		165/70 R13 x 2







WATER PUMP

For construction, irrigation, or emergency flood control, we offer water pumps that meet your specific needs with exceptional performance, reliability, and ease of use.

POWER PACK HYDRAULIC WATER PUMP



Flow Rate (L/S) :

900-1200

ATLAS COPCO WATER PUMP



Flow Rate (L/S) :

94

TOKU WATER PUMP



Flow Rate (L/S) :

87



LOAD BANK

Need a load bank for testing, commissioning, or maintenance? Our reliable and easy-to-use load banks ensure your power systems run efficiently. We also offer expert support for installation and maintenance.



KEYPOWER LOADBANK 1000

Capacity (KW) :

1000

Voltage Range (V) :

AC 110-690V



DEPCO POWER LOAD BANK 1500

Capacity (KW) :

1500

Voltage Range (V) :

480

TTL GROUP OF COMPANIES

POWER PACK HYDRAULIC WATER PUMP



HYDRAULIC WATER PUMP SPECIFICATIONS

SUNNY HOSE - 50’ X 6
WIDTH (MM) - 760
HEIGHT - 1280
DRY MASS (KG) - 950
LENGTH (MM) - 1670
PUMP PRESSURE - 2000psi
WET MASS (KG) - 1050
HYDRAULIC HOSE - 30FT
FLOW RATE (L/S) - 90 -120
OPERATING SPEED - 28rpm @ 50 Hz
OPERATING POWER - 0.37kW / 0.5HP
MAX SUCTION LIFT - 9.5mwc
WEIGHT (KG) : 605

TTL SALES & RENTAL SDN BHD

No. 18, Jalan Nouvelle, Nouvelle Industrial Park Balakong, Jalan Perindustrian Balakong
43300 Seri Kembangan Selangor Darul Ehsan, Malaysia

Tel: 019-987 4168 Email: enquire@ttl-holdings.com

TTL GROUP OF COMPANIES

MOTO TRASH WATER PUMP 6"

F3LI912



SPECIFICATIONS

Engine	**F3LI912**
Engine RPM	**1200-1800 rpm**
Cylinder	**3 Cylinder**
Water Flow	**200m3 max rated 135m3/hour**
Pump Type	**Diaphragm Self Vacum Type**






SCISSOR LIFT



MODEL	Max Height	Platform Height	Type
Genie Scissor Lift GS-1930	7.79m	5.79m	✓ Diesel
Genie Scissor Lift GS-2646	9.80m	7.92m	✓ Diesel
Genie Scissor Lift GS-3246	11.78m	9.78m	✓ Diesel
Genie Scissor Lift GS-3369 DC	11.75m	9.96m	✓ Diesel
Genie Scissor Lift GS-4047	13.72m	11.89m	✓ Diesel
Genie Scissor Lift GS-5390 RT	17.95m	16.15m	✓ Diesel

MODEL	Max Height	Platform Height	Type
Dingli Scissor Lift JCPT1212HA	12m	10m	✓ EV





MODEL	Type
JLG Scissor Lift R Series	✓ EV
JLG Scissor Lift ES Series	✓ EV



SCISSOR LIFT

MODEL	Horizontal Height	Vertical Height	Type
Zoomlion Scissor Lift ScZS0607HDS	7.8m	5.79m	✔ EV
Zoomlion Scissor Lift ZS0808HDS	10.00m	7.92m	✔ EV
Zoomlion Scissor Lift ZS1012HDS	11.80m	9.78m	✔ EV
Zoomlion Scissor Lift ZS1212HDS	13.80m	9.96m	✔ EV
Zoomlion Scissor Lift ZS1414HDS	15.7m	11.89m	✔ EV





ZOOMLION

NOBLELIFT
Scissor Lifts



MODEL	Max Height	Horizontal Height	Vertical Height	Type
Noblelift Scissor Lift SCO6E	5.9m	1.67m	3.9m	✔ EV
Noblelift Scissor Lift SC08HC/EC	7.8m	1.78m	5.8m	✔ EV
Noblelift Scissor Lift SCO8HN/EN	10.0m	1.81m	6.0m	✔ EV
Noblelift Scissor Lift SC10HN/EN	7.79m	1.93m	8.0m	✔ EV
Noblelift Scissor Lift 10E/H	7.79m	1.78m	8.0m	✔ EV
Noblelift Scissor Lift SC12E / H	7.79m	1.92m	10.0m	✔ EV
Noblelift Scissor Lift SC14E / H	7.79m	2.04m	12.0m	✔ EV
Noblelift Scissor Lift SC14E / H	7.79m	2.17m	13.7m	✔ EV







BOOM LIFT

Genie



MODEL	Max Height	Horizontal Height	Vertical Height	Type
Genie Articulated Boom Lift Z-34/22N	12.52m	6.78m	2.26m	✔ Diesel
Genie Articulated Boom Lift Z-45 XC	15.86m	-	7.22m	✔ Diesel
Genie Articulated Boom Lift Z-60/37 DC and FE	20.16m	-	18.16m	✔ Diesel
Genie Articulated Boom Lift Z-80/60	25.77m	18.29m	8.83m	✔ Diesel
Genie Articulated Boom Lift ZX-135/70	43.15m	21.26m	23.01m	✔ Diesel
Genie Telescopic Boomlift S-40	14.20m	-	-	✔ Diesel
Genie Telescopic Boomlift S-45	15.72m	-	-	✔ Diesel
Genie Telescopic Boomlift S-60X	19.79m	-	-	✔ Diesel
Genie Telescopic Boomlift S-65	21.81m	-	-	✔ Diesel
Genie Telescopic Boomlift S-80XC	26.27m	-	-	✔ Diesel
Genie Telescopic Boomlift S-85XC	27.74m	-	-	✔ Diesel
Genie Telescopic Boomlift S-105XC	34m	-	-	✔ Diesel

MODEL	Max Height	Horizontal Height	Vertical Height	Type
Zoomlion Boom Lift ZS0607HDS	7.8m	1.05m	5.8m	✔ EV
Zoomlion Boom Lift ZS0808HDS	10.0m	1.26m	8.0m	✔ EV
Zoomlion Boom Lift ZS1012HDS	11.8m	1.39m	9.8m	✔ EV
Zoomlion Boom Lift ZS1212HDS	13.8m	1.52m	11.8m	✔ EV
Zoomlion Boom Lift ZS1414HDS	15.7m	1.54m	13.7m	✔ EV

ZOOMLION



BAR BENDER

Bar Bender is design to be efficient and accurate bar bending for Modern Construction Site. Simple operation by only feeding bar and pedaling a treadle. Bending angle is always constant and accurate by use of fulcrum roller. Bars of 13mm-32mm can be bend by changing different sizes fulcrum rollers provided (Total of 6 pieces). This trouble free, high performance and excellent durability machine can use in factories and construction sites.

DIESEL ENGINE MODEL

BAR BENDER - 32MM

Specifications :

Model	DBB - 32
Maximum Bar Diameter	32mm
Engine	ATLANTA RK70
Engine Type	Horizontal, water cooled 4 cycle Diesel Engine
Rated Output (hp/rpm)	7 / 2400
Dimension (LxWxH)	1170 x 900 x 750
Roller Size	Ø64,Ø86,Ø110,Ø125
Net Weight	650 kg





BAR BENDER - 42MM

Specifications :

Model	DBB - 42
Maximum Bar Diameter	42mm
Engine	ATLANTA RK125
Engine Type	Horizontal, water cooled 4 cycle Diesel Engine
Rated Output (hp/rpm)	12.5 / 2400
Dimension (LxWxH)	1375 x 1010 x 935
Roller Size	Ø85,Ø98,Ø110,Ø140
Net Weight	950 kg

BAR BENDER - 52MM

Specifications :

Model	DBB - 52mm
Maximum Bar Diameter	52mm
Engine	ATLANT A RK165
Engine Type	Horizontal, water cooled 4 cycle Diesel Engine
Rated Output (hp/rpm)	16.5 / 2400
Dimension (LxWxH)	1170 x 1150 x 1150
Roller Size	Ø94,Ø120,Ø135,Ø185
Net Weight	1250 kg



BAR CUTTER

Bar Cutter is design to be efficient and accurate bar cutting for Modern Construction Site. The machine can be fitted with rubber or cast iron wheels making machine movable at the site. Powered by Diesel Engine to make operation possible at site where no electric is supplied. Diesel Engine Model can be converted to Electric Motor or vice versa on base-plate provided with suitable foundation. Simple operation by only pedaling a clutch release treadle.

DIESEL ENGINE MODEL

BAR CUTTER- 32MM

Specifications :

Model	DBC -32
Maximum Bar Diameter	32mm
Working Speed	40rpm
Engine	Kuboto, Vikyno, Shinmax RK80 Diesel Engine
Engine Type	Horizontal, water cooled 4 cycle Diesel Engine
Rated Output (hp/rpm)	5 / 2400
Dimension (LxWxH)	1300 mm x 660 mm x 750 mm
Net Weight	600 kg





BAR CUTTER - 42MM

Specifications :

Model	DBC - 42
Maximum Bar Diameter	42mm
Working Speed	40rpm
Engine	Kuboto, Vikyno, Shinmax RK125 Diesel Engine
Engine Type	Horizontal, water cooled 4 cycle Diesel Engine
Rated Output (hp/rpm)	12.5 / 2400
Dimension (LxWxH)	1610mm x 685 mm x800 mm
Net Weight	950 kg

BAR CUTTER - 50MM

Specifications :

Model	DBC -50
Maximum Bar Diameter	45mm
Diesel Engine Power	16.5 HP
Dimension (LxWxH)	1800 mm x 800 mm x 850 mm
Net Weight	1030 kg



BAR CUTTER

Bar Cutter is design to be efficient and accurate bar cutting for Modern Construction Site. The machine can be fitted with rubber or cast iron wheels making machine movable at the site. Powered by Diesel Engine to make operation possible at site where no electric is supplied. Diesel Engine Model can be converted to Electric Motor or vice versa on base-plate provided with suitable foundation. Simple operation by only pedaling a clutch release treadle.

ELECTRIC ENGINE MODEL

BAR CUTTER - 32MM

Specifications :

Model	EBC - 32
Maximum Bar Diameter	32mm
Motor Output	7.5HP / 3 P / 415V / 50HZ / 1500RPM
Dimension (LxWxH)	125 X 101 X 87.5
Net Weight	850 KG
Roller Size	22, 25





BAR BENDER - 42MM

Specifications :

Model	EBC - 42
Maximum Bar Diameter	42mm
Motor Output	10HP / 3 P / 415V / 50HZ / 1500RPM
Dimension (LxWxH)	137.5 X 101 X 93.5
Net Weight	950 KG
Roller Size	29, 32

BAR BENDER

Bar Bender is design to be efficient and accurate bar bending for Modern Construction Site. Simple operation by only feeding bar and pedaling a treadle. Bending angle is always constant and accurate by use of fulcrum roller. Bars of 13mm-32mm can be bend by changing different sizes fulcrum rollers provided (Total of 6 pieces). This trouble free, high performance and excellent durability machine can use in factories and construction sites.

ELECTRIC ENGINE MODEL

BAR BENDER - 32MM

Specifications :

Model	EBB - 32
Maximum Bar Diameter	32mm
Motor Output	7.5HP / 3 P / 415V / 50HZ / 1500RPM
Dimension (LxWxH)	1315 X 64 X 78
Net Weight	750 KG
Steel Bar Tensile Strength	450 N/ mm^2





BAR BENDER - 42MM

Specifications :

Model	EBB - 42
Maximum Bar Diameter	42mm
Motor Output	10HP / 3 P / 415V / 50HZ / 1500RPM
Dimension LxWxH (mm)	161 X 68.5 X 80
Net Weight	950 KG
Steel Bar Tensile Strength	450 N/ mm

HYDRAULIC LINK BENDER







SPECIFICATION

MODEL	HBB22BDE
Working capacity - max. Bar Dia. (mm) - rated Bar Dia. (mm)	22 20
Max Bending Angle (degree)	210
Powered by - Diesel Engine - Motor	7-8HP 10Hp, 414V/50Hz, 3000rpm

Bar Bending capacity with corresponding centre Roller

Bar Dia. (mm)	6	8	10	12	14	16	18	20
Bending (pc)	9	7	5	4	3	2	1	1

RING BENDER



RB-19

RB-19 is designed for bending of steel bars into circular & ring shapes for construction & fabrication application. Powered by 6/7 HP engine, it supports steel bar bending up to 32mm in diameter, making it suitable for various heavy-duty steel reinforcement & fabrication tasks.

DIESEL ENGINE MODEL

Specifications :

Model	RB - 19
Working Capacity Max. Bar Dia (mm)	20mm
Continuous Bar. Dia (mm)	16mm
Diesel Engine	6/7 HP
Dimension	1168 x 762 x 838 mm
Weight (kg)	337kg
Steel Bar Tensile Strength	450N/m^3

Features :

* High bending capacity of more than 10 times compared to manual bending
* Simple operation by only feeding bard and pedaling a treadle
* Bending angle is always constant and accurate by use of fulcrum roller
* Different sizes fulcrumrollers provided
* Economical, heavy duty made and simple maintenance
* Can be powered by electric motor & diesel engine to make operation possible in any construction site
* The bending of steel bar can be present and change from 0 deg to 180 deg with the limit plan

LINK BENDER



DIESEL ENGINE MODEL

DLB-12

Specifications :

Model	DLB - 12
Working Capacity Max. Bar Dia (mm)	Ø12
Engine	Changchai CC 170
Engine Type / Motor Type	Air-cooled Diesel Engine`
Standard Roller (mm)	Ø48
Weight (kg)	340
Dimensions (Lx W x H) (mm)	1040 x 900 x 870



ELECTRIC ENGINE MODEL

Model	DLB - 12
Working Capacity Max. Bar Dia (mm)	Ø12
Engine	TECO 2.2kW / 4 Pole
Engine Type / Motor Type	Three Phase 415V
Standard Roller (mm)	Ø48
Weight (kg)	340
Dimensions (Lx W x H) (mm)	1040 x 900 x 870

SPIRAL BENDER







DSB-16

DIESEL ENGINE MODEL

Specifications :

Model	DSB - 16
Maximum Bending Diameter	16mm
Maximum Radius	300
Minumum Radius	20
Engine	CHANGCHAI RK 80
Engine Type	Water cooled Diesel Engine
Max. Output (hp/mpm)	7 / 2400 or 6 / 2400
Weight (KG)	470
Dimensions (Lx W x H) (mm)	960 x 960 x 900

DSB-25

ELECTRIC ENGINE MODEL

Specifications :

Model	DSB - 25
Maximum Bending Diameter	25mm
Maximum Radius	600 mm
Minumum Radius	120mm
Electric Motor	TECO 4kW / 4 Pole
Motor Type	Three Phase 415V
Weight (KG)	560
Dimensions (Lx W x H) (mm)	950 x 950 x 900



TELEHANDLER

JCB 535-140

Max Lifting Height :

13470 mm

Max Lifting Weight :

3500 kg





JCB 535-125

Max Lifting Height :

12270 mm

Max Lifting Weight :

3500 kg





JCB 535-70

Max Lifting Height :

7000 mm

Max Lifting Weight :

3500 kg





XCMG

TELEHANDLER
XT4014K

Built for flexibility & efficient operation. Suitable for construction sites, industrial facilities, warehouse & material-handling-applications. Its telescopic boom provides extended reach, making it easier to lift position & transport materials across diferent working enviroment.

TTL GROUP OF COMPANIES



SPECIFICATION :

· Overall Dimension (L x W x H)	6160mm x 24200mm x 2550mm
· Max. Load Capacity (kg)	4000kg
· Max. Working Height (m)	13.57m
· Lift Capacity at Max Outreach (kg)	1500kg
· Lift Capacity at Max Working Height (kg)	3000kg
· Max Outreach	9.5m
· Boom Lifting Range:	3 °~ 72°
· Fork Tilt Angle Range (boom being horizontal)	14° ~ 112°
· Engine	YuChai
· Total Weight	11200 kg



LOAD CHART

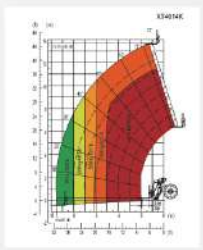

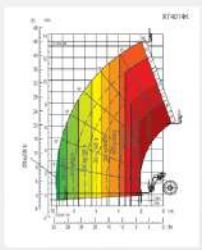

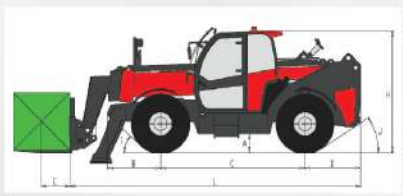

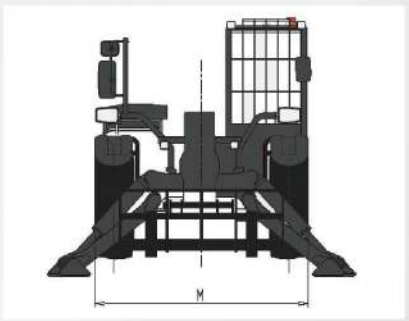

www.ttl-holdings.com

TTL GROUP OF COMPANIES

MANITOU

TELEHANDLER
MXT 1740 P

Delivers powerful lifting and extended reach capabilities for demanding construction and industrial applications. Designed for efficient material handling, it offers reliable performance for lifting, loading and positioning materials at height.



SPECIFICATION	VALUE
• Max. Capacity	• 4000 kg
• Max. Lifting Height	• 17.40 m
• Max. Outreach	• 13.48 m
• Engine Power	• 92 HP / 70 kW
• Overall Weight	• 11,235 kg
• Overall Dimensions	• 6.20 x 2.38 x 2.59 m
• Maximum Travel Speed	• 28 km/h
• Engine Brand	• Perkins



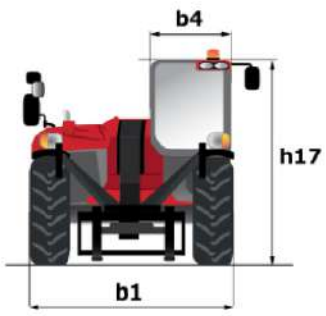

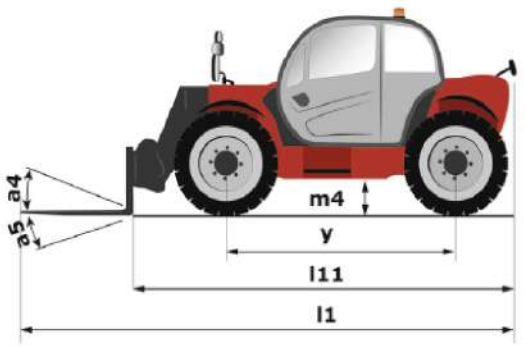

CONCRETE MIXER





Cast Iron Material *Heavy Duty*

Cast Iron Material *Standard Duty*

7TM CONCRETE MIXER (470L)

Mixing Tank Capacity	L	420
Number of Bag		2.5 bag
Capacity Per Hour	m3/hr	8 - 10
Rotation Speed	rp	26
Drum's Lower Part Thickness	mm	3.5
Drum's Side and Upper Part Thickness	mm	3.0
Drums' Diameter	mm	920
Mouth Drum's Diameter	mm	480
Electric Motor	kw	3.7
Engine		Costa Dalta 5hp single cylinder air-cooled diesel engine
Weight	kg	267
Dimension (L x W x H)	cm	215 x 95 x 155

AIR BREAKER

TOKU



AIR BREAKER - TPB 20

Weight Class

20 lbs

Blows Per Minute (BPM)

1,500 BPM

Air Ccnsumption

1.0 m^3/min



AIR BREAKER - TPB 60

Weight Class

60 lbs

Blows Per Minute (BPM)

1,400 BPM

Air Consumption

2.2 m^3/min



AIR BREAKER - TPB 73

Weight Class

73 lbs

Blows Per Minute (BPM)

1,200 BPM

Air Consumption

2.5 m^3/min



AIR BREAKER - TPB 90

Weight Class

90 lbs

Blows Per Minute (BPM)

1,000 BPM

Air Consumption

3.0 m^3/min

JADE

ROLLER COMPACTOR

Heavy-duty, walk-behind double-drum vibratory roller engineered for compacting soil, gravel, sand, and asphalt in tight spaces. Powered by a water-cooled diesel engine and a Japanese Daikin hydraulic drive pump



SPECIFICATION

• MODEL	• MRH - 605S
• ENGINE	• RD90N-1 WATER COOLED
• POWER (HP)	• 9
• FUEL	• DIESEL
• STARTING MODEL	• MANUAL & ELECTRIC
• DRIVE TYPE	• DAIKIN JAPAN HYDRAULIC
• VIBRATION SYSTEM	• ELECTRIC
• TRAVEL SPEED (m/hr)	• 0 - 40
• VIBRATION (Hz)	• 55
• WATER TANK (L)	• 35
• DRUM SIZE	• 356*650*2
• GRADEBILITY	• 25 °
• WEIGHT (KG)	• 605
• CENTRIFUGAL FORCE (KN)	• 10.8
• OVERALL SIZE	• 1340*760*1830

FORKLIFT

DIESEL





Brand / Capacity	Caterpillar	Toyota	Mitsubishi	TCM	Maximal
2 tonne		✓			
2.5 tonne		✓			✓
3 tonne		✓		✓	✓
3.5 tonne					✓
4 tonne					✓
4.5 tonne					✓
5 tonne		✓			✓
7 tonne	✓				✓
10 tonne			✓		

EV

maximal

Model / Capacity	FBAX25-YJ	FBAX25-YJ	FBAX35-YJ	FBAX35-YJ	FBAX50-XYT2	FBAX50-YT2	FBAX70-YT2
2.5 tonne	✓						
3 tonne		✓					
3.5 tonne			✓				
4.5 tonne				✓			
5 tonne					✓	✓	
7 tonne							✓







SPECIFICATION :

SPECIFICATION	REF	UNIT	VALUE
· Manufacturer			· EP
· Model Designation			· EFX5 - 301
· Battery Voltage		· V	· 80
· Rated Capacity	· Q	· kg	· 3000
· Load Centre Distance	· c	· mm	· 500
· Service Weight		· kg	· 4820
· Height, Mast Lowered	· h_1	· mm	· 2065
· Lift	· h_3	· mm	· 3000
· Height, Mast Extended	· h_4	· mm	· 4130
· Overall Length	· l1	· mm	· 3819
· Overall Width	· b_1 / b_2	· mm	· 1230
· Lenght to Face of Forks	· l_2	· mm	· 2749
· Fork Dimensions	· s / e / l	· mm	· 45 x 122 x 1070
· Turning radius	· wa	· mm	· 2498
· Drive			· Electric
· Operator Type			· Seated

4WD ROUGH TERRAIN EV FORKLIFT 3.0 TONNE

3000 kg

6000 mm

309V Lithium-ion



SPECIFICATION :

SPECIFICATION	REF	UNIT	VALUE
· Manufacturer			· EP
· Model Designation			· RTF30-4L1-HV
· Battery Voltage		· V	· 309/150
· Rated Capacity	· Q	· kg	· 3000
· Load Centre Distance	· c	· mm	· 500
· Service Weight		· kg	· 5400/ (5480)
· Height, Mast Lowered	· h_1	· mm	· 2215
· Lift	· h_3	· mm	· 3000
· Height, Mast Extended	· h_4	· mm	· 4095
· Overall Length	· l1	· mm	· 4168
· Overall Width	· b_1 / b_2	· mm	· 1500
· Lenght to Face of Forks	· l_2	· mm	· 3003
· Fork Dimensions	· s / e / l	· mm	· 45×122×1070
· Turning radius	· wa	· mm	· 3195
· Drive			· Electric
· Operator Type			· Seated



WHICH FORKLIFT SAVES YOU MORE?

Diesel Forklift (2.5/3.0 Ton Capacity)

CATEGORY	VALUE
Fuel Price	RM 3.20/litre
Consumption	3 litres/hour
Daily Usage (6 Hours)	RM 57.60
Monthly Cost (24 Days)	RM 1,382.40
Annual Cost (12 Months)	RM 16,588.80

Electric (EV) Forklift (Lithium Battery - 2.5/3.0 Ton Capacity)

CATEGORY	VALUE
Electricity Rate	RM 0.58/kWh
Battery Capacity	280Ah @ 48V = 13.4 kWh
Daily Usage (6 Hours)	RM 6.70
Monthly Cost (24 Days)	RM 160.80
Annual Cost (12 Months)	RM 1,929.60

Quick Recap

- Electric forklift (EV) offer up to 90% lower operating costs, saving over RM 14,000 annually in fuel alone
- Diesel forklifts while powerful & quick to refuel, come with higher fuel expenses & frequent maintenance needs
- EV reduce CO_2 emissions by more than 70%, supporting sustainability & ESG goals
- Diesel forklift emit significantly more carbon, makinng them less suitable for clean or indoor enviroments
- Evs are quiter, cleaner & easier to maintain, ideal for urban logistics & indoor operations
- Diesel forklifts remain useful for heavy-duty, outdoor tasks, especially where charging infrastructure is limited



SOLAR CCTV SYSTEM

UNIV developed the UBT-3000S specifically for the AU market, featuring a larger solar panel, lithium battery, improved MPPT controller, and a more powerful LED light or CCTV system, all housed in a robust design.

If you're looking for a higher-level model, the UBT-300S is the ideal choice.

SPECIFICATION

UBT - 300S

Solar Panel	500W
Panel Lifting	0 - 90 Manual Lifting
LFP Battery	2.94kWh 95% DoC
System Voltage	DC12V
Battery Charger	Optional
CCTV	1 x 4MP TandemVu
Storarge	1 x 512GB, 10 Days
4g Router	Yes
Loud Speaker	Yes
Controller	40A MPPT
Mass & Height	4 Sections 4M
Mass Lifting	Manual Winch
Trailer Standard	
Hitch	
Brake	
Axle	
Tire	
Outriggers	Optional
Lifting Ring	4 X
Forklift Holes	4 X
Wokring Temp	
Charging Time	5.9 Hours
Running Time	4 Days
Dimension (mm)	1000* 1000* 2900
Weight	400KG
QTY in 20' /40'	10 Units / 20 Units

CCTV System



Optional



20' | 10 Units



40' | 20 Units

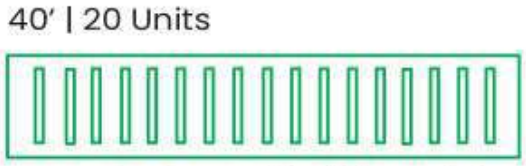

All parameters as references only, please subject the machine in manufacturer.



www.ttl-holdings.com

SOLAR
LIGHT TOWER

SPECIFICATION

SF-900L

Solar Panel	1500W
Panel Lifting	30 - 45 Manual Lifting
LFP Battery	11.77kWh 95% DoC
System Voltage	DC24V
Battery Charger	Yes
LED Lamp	4 x 100W, 68000 Lms
Lighting Area (5 Lux)	1481m^2
Rotation	350 Electric
Tilt	90 Electric
Controller	60A MPPT
Mass & Height	5 Sections 7M
Mass Lifting	Manual Winch
Trailer Standard	US / AU / EU
Hitch	2" Ball / 3" Ring
Brake	Eletric
Axle	Single
Tire	15 inch
Outriggers	4 x
Lifting Ring	4 X
Forklift Holes	2 X
Wokring Temp	-20C ~ 60C
Charging Time	7.9 Hours
Running Time	28 Hours
Dimension (mm)	3550* 1650* 2800
Weight	1150kg
QTY in 20' /40'	3 Units / 7 Units



Optional

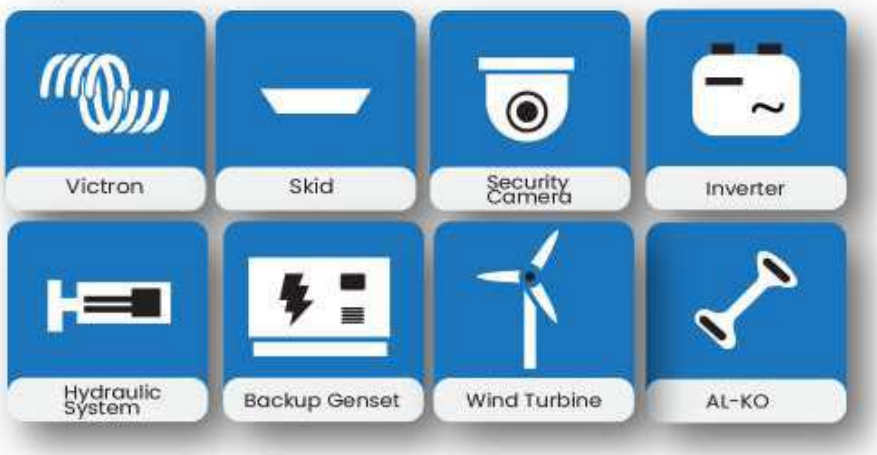

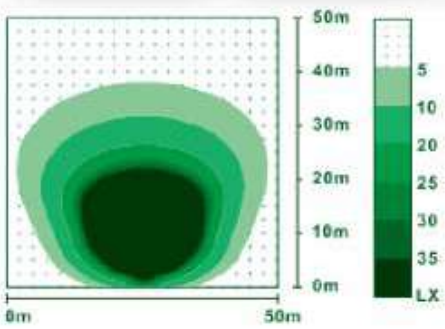

20' | 3 Units

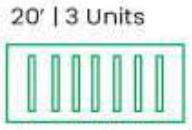

40' | 7 Units

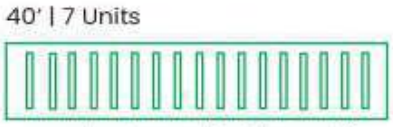

All parameters as references only, please subject the machine in manufacturer.





CONTACT US!

Phone

+6019-987 4168

Email

enquire@ttl-holdings.com

www.ttl-holdings.com

TTL Group Of Companies

成丰机械销售与租赁集团